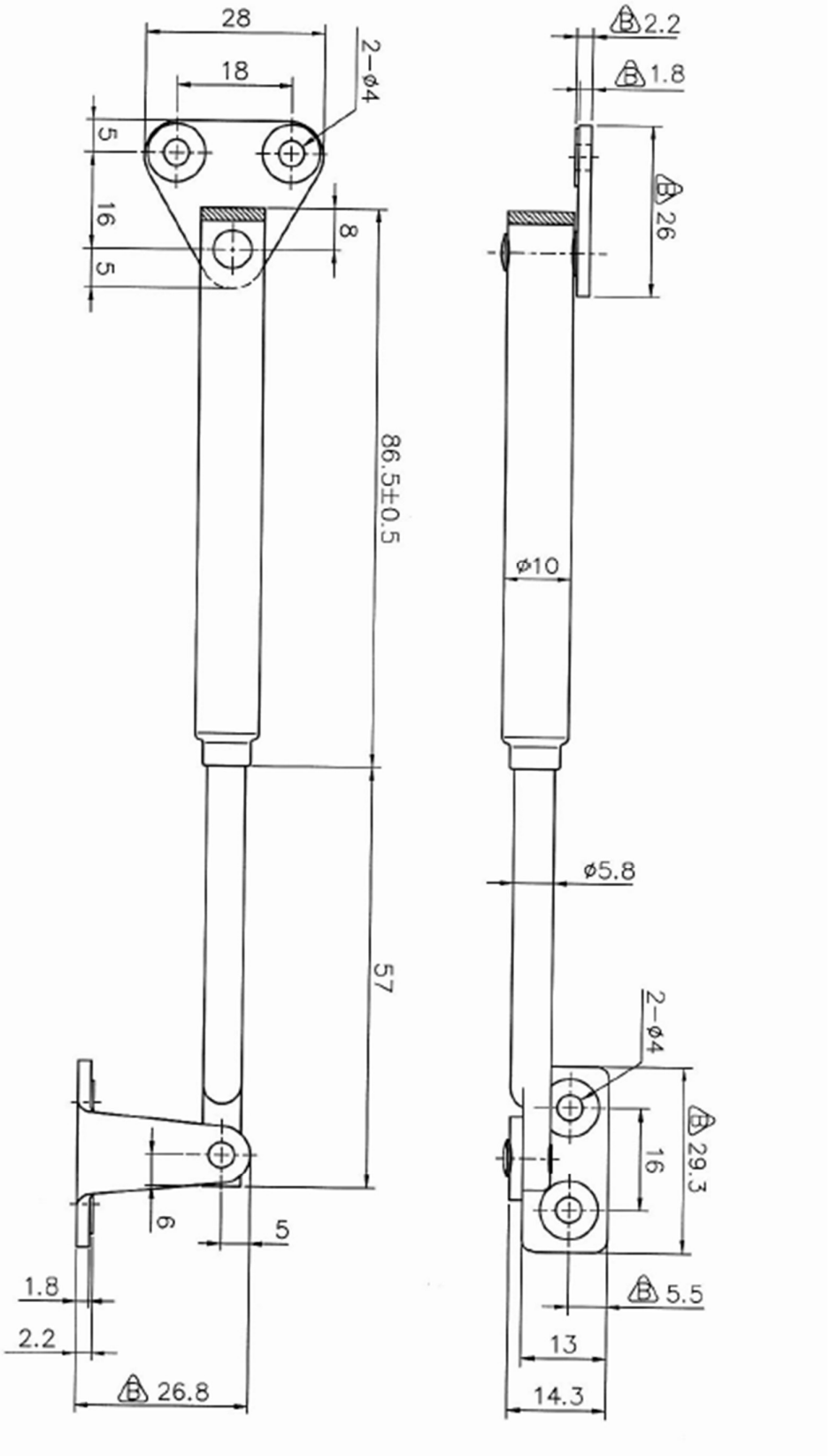
28
18
2−ø4
5
16
5
8
86.5±0.5
57
6
5
1.8
2.2
26.8
2.2
1.8
26
ø10
ø5.8
2−ø4
16
29.3
5.5
13
14.3